AQUATIC

LUXEAIR 21

LUXEAIR SERIES MODEL # AI21LUX7042

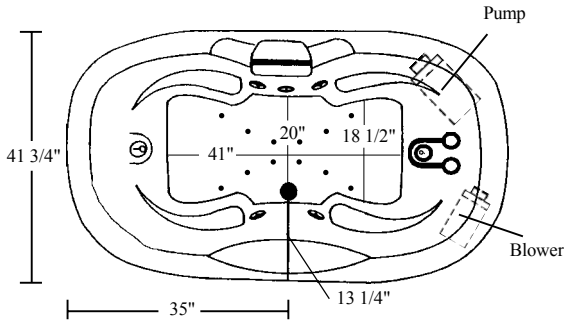

Two Person Bath

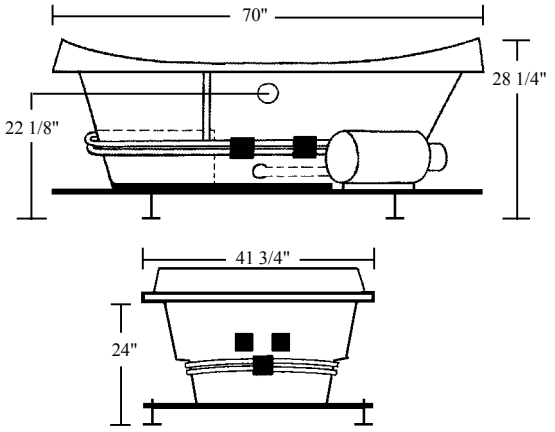

Rough-In Plumbing Measurements

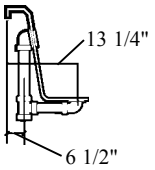

EQUIPMENT LEGEND

- Drain
- Blower/Pump Locations
- StressEaz Neck and Shoulder Therapy System II
- Air Bath System
- Rotary Massage Jet
- Full Size Pressure-Flo Hydrotherapy Jet

SPECIFICATIONS:

General Specifications:

Tub Size	70" x 41 3/4" x 28 1/4" 178 cm x 106 cm x 72 cm
Bathing Well	41" long 23 1/4" interior depth
Shipping Weight	256 lbs. / 116 kg
Tub Weight Filled	1047 lbs. / 476 kg
Tub Only Weight	134 lbs. / 61 kg
Gallons to Overflow	95 gal. / 360 L
Gallons to Operate	1 bather: 76 gal. / 288 L 2 bathers: 57 gal. / 216 L

Electrical Specifications:

Pump	1.5 HP; 12 AMP; 110V
Inline Heater	1.5 kw; 12.5 AMP; 110V
Requirement	1-15 AMP 2 pole, separate circuit required protected with Class A GFCI
Blower	1 HP; 10.5 AMP; 110V
Requirement	1-15 AMP 1 pole, separate circuit required protected with Class A GFCI

This whirlpool will need to be hard wired to the breaker box. Three outlets will be supplied on the whirlpool.

STANDARD EQUIPMENT:

- **Whirlpool Bath System:**
  1.5 HP Run-Dry Pump with 20-Minute Time
  1.5 kw Inline Maintenance Heater
  8 Hydrotherapy Jets including:
  - 4 Full Size Pressure-Flo Hydrotherapy Jets
  - 2 StressEaz Neck & Shoulder Therapy Jets
  - 2 Recessed Rotary Massage Jets
- **Air Bath System:**
  1 HP Variable Speed Air Blower with 20-Minute Timer
  3 Massage Settings: Constant, Wave and Pulse
  Automatic Purge and Dry Cycle
  600 Watt Air Heating System
- **Aquatic Quality Features:**
  Electronic Control Panel
  "Quiet Pad" Anti-Vibration Pump Mount for Quiet Pump Operation
  Acrylic Grab Bar
  4 Arm Rests
  Slip Resistant Floor
  Adjusta-Level Base
  Heat-bent Rigid PVC Piping for Optimum Sanitary Conditions
  Durable, Easy to Clean, Lucite® Cast Acrylic Surface
  Available in 8 Standard No-Charge Colors
- **UL & IAPMO Listed, Factory Tested**
- **Limited 10 Year Warranty**

OPTIONAL EQUIPMENT:

- Comfort Pillow -- Oval or Rectangle
- Jet Finish
  -- Chrome, Polished Brass, Gold, Polished Nickel or Satin Nickel
- Grab Bar
  -- Chrome, Polished Brass, Gold, Polished Nickel or Satin Nickel
- Lift & Turn Waste and Overflow
  -- Chrome, Polished Brass, Gold, Polished Nickel or Satin Nickel
- Cable Drive Waste and Overflow
  -- Chrome, Polished Brass, Gold, Polished Nickel, Satin Nickel or Color Matched (Bone, White & Biscuit Only)
- Hand Held Jet
- Decorative Rim Kit -- Chrome or Polished Brass
- Premium Colors

All acrylic colors featured by Aquatic match the industry's leading fixture manufacturers.

Not recommended for shower installations.

Fax-On-Demand Document # 1205

TOLL-FREE, 24-HOUR 1-877-618-7024 FAX INFO

The manufacturer accepts a 1/4" variance. There are variations on each tub and specifications are subject to change as we improve upon our product as required. The dimensions needed for site preparation and structure building should be measured from the tub; Aquatic Industries, Inc. assumes no responsibility for preparatory work.